Open Channel Flowmeter

Installation Guide Manual

January 1, 2026

V5.16

Support Parshall flume, triangular weir, rectangular weir, trapezoidal weir, Palmer-bowlus Flume, Chezy formulae, and customized liquid level-flow chart.

Contents

Welcome, Application, Feature......1

Technical Parameters...... 2

Installation Location......3

Installation Method...... 4

Instrument Display......5

Basic Parameters (Password 1000)

- P02 20mA Setup...... 6
- P03 Display 6
- P04 Probe Height......7
- P05 Response......7
- P06 Dead Band...... 8
- P07 Language......8
- P08 Dist Unit......8
- P10-P15 Logic Relay 1-6......9
- P16 Relay Buffer...... 9
- P30 Weir...... 10
- P31 Flow Coefficient (C)...... 10
- P32 Flow Index (N)......10
- P33 Weir Depth(Hv)......11
- P34 Min Water Head(Lv)......11
- P35 Flow Unit...... 11
- P36 Flow Records......11
- P37-P39 Channel Width & Weir Width & Weir Height...... 12

Advanced Parameters (Password 0101)

- P40 Damping Time......13
- P41 Alarm Output......13
- P42 Delay Alarm...... 13
- P43 Threshold......13
- P44 Output Power...... 14
- P45 First Echo Coefficient......14
- P48 Safety-Dist......14

P50 ID..15
P51 Baud..15
P53 Float Order..15
P54 COMM Test.. 16
P55 Set Time.. 16
P56 FIQ Clear.. 16
P57 20mA Setting Value of Downstream Instrument 17
P58 Power-Fail ACC...17
P59 Downstream Instrument Installation Height 17
P60 Simulate Current Output... 18
P62-P63 Pulse Width & Pulse Equal... 18
P64 Work Record.. 18
P65 Print.. 18
P66 Temperature Sensor's Delay... 19
P99 Load Param.. 19

Additional Parameters (Password 0110)

T00 Level Val(Only P30 = table).. 20
T01-T10 Level Flow Table(Only P30 = table)...20
T35-T36 Slope & Roughness(Only P30 = chezy)... 20
T37-T38 Top Width & Bottom Width(Only P30 = chezy)...20
Appendix 1: Parshall Flume...21
Appendix 2: Triangular Weir.. 23
Appendix 3: Rectangular Weir.. 24
Appendix 4: Trapezoidal Weir... 25
Appendix 5: PALMER-BOWLUS Flume... 26
Appendix 6: Parameter Setting of Liquid Level-Flow Chart... 27
Appendix 7: Chezy Formulae... 28
Appendix 8: HART Command...31
Appendix 9: Modbus-RTU Communication Protocol...32
Appendix 10: Instrument Dimension Diagram... 33
Appendix 11: Instrument Wiring Diagram...34
Appendix 12: Pulse Output Wiring... 35
Packing List, Warranty Card.. 36, 37

Welcome

Thank you for purchasing our ultrasonic open channel flowmeter!

The manual introduces the application, features, functions, installation and setting of the open channel flowmeter. It attempts to help users understand, install, use and maintain this instrument.

The product shall be used in conjunction with the measuring weir/flume, mainly used to measure the sewage flow in the channel under the open, partially filled, and free flow conditions.

Application

- The instrument is applicable to continuous and non-contact measurement for flow.
- The instrument can be used for factory sewage outlet, farmland irrigation,etc.

Features

- Display instantaneous flow, accumulated flow, duration, liquid level, echo waveform, and history curve.
- Show and print instantaneous liquid level, instantaneous flow, accumulated flow, duration, and other real-time data.
- Show and print the parameter setting of the instrument, as well as the flow data of the last 8 days, the last 8 months, and the last 8 years.
- Query the flow at any time within the last 8 years.
- Own operation logs, and circularly record startup time, shutdown time, setting time, and flow rate reset time, as well as new and old values of operations such as changing weir/flume and modifying probe height.
- Have functions, such as 4～20mA current output simulation and RS485 diagnosis.
- Automatically detect the on-site electrical interference and conduct the interference suppression.
- Carry out the full physical isolation, with complete output interfaces.
- Correct the flow rate of the submerged flow.
- Own the power outage accumulation function.

Technical Parameters

Measurement Range	Instantaneous Flow	1 L/s ~ 32000 m^3/h
	Accumulated Flow	4,000,000,000 m^3 (4 billion cubic meters)
	Liquid Level	0.0m～3.0m (able to increase to 6.0 m)
Measurement Accuracy	Flow	Triangular weir 1～5%/rectangular weir 3～5%/ Parshall flume 2～3%
	Liquid Level	±0.3%FS* (standard conditions*)
Dead Band		0.25m～0.30m
Instrument Display		Instantaneous flow, accumulated flow, duration, level, distance, and echo waveform
Power Supply		DC12～36V / 60mA or AC85～265V / 3W
Isolated Output	Simulation Current	One-way 4～20mA electric current/HART interface
	Digital Signal	One-way RS485 interface/ModBus-RTU protocol
	Switching Value	Two-way switching, AC250V 3A/ DC30V 5A
	Pulse Signal	6～100ms pulse output
Printer		able to connect EM5820 miniprinter
Environmental Temperature	Electrical Engineering	－35℃ ~ ＋70℃*
	Probe	－40℃ ~ ＋80℃
Interface	Electrical Engineering	PG11 waterproofing joint
	Probe	G2”/ NPT2” (optional)
Housing Material	Instrument Housing	ABS
	Probe Housing	ABS / ETFE / PTFE
Waterproofing Grade		IP65/IP68 (optional)

*FS: Full scale;

*Standard conditions: At normal atmospheric pressure, operate the instrument in the air, with the temperature of 20℃±5℃, humidity of 45%~75%, and no wind around.

*The environmental temperature is less than -20℃ or more than +60℃, and the LCD display is restricted.

*The instrument is installed outdoors. It is required to avoid direct sunlight on the LCD. The installation of ventilation sunshade is preferred.

Installation Location

The open channel flowmeter can be installed on three sites including A, B and C.

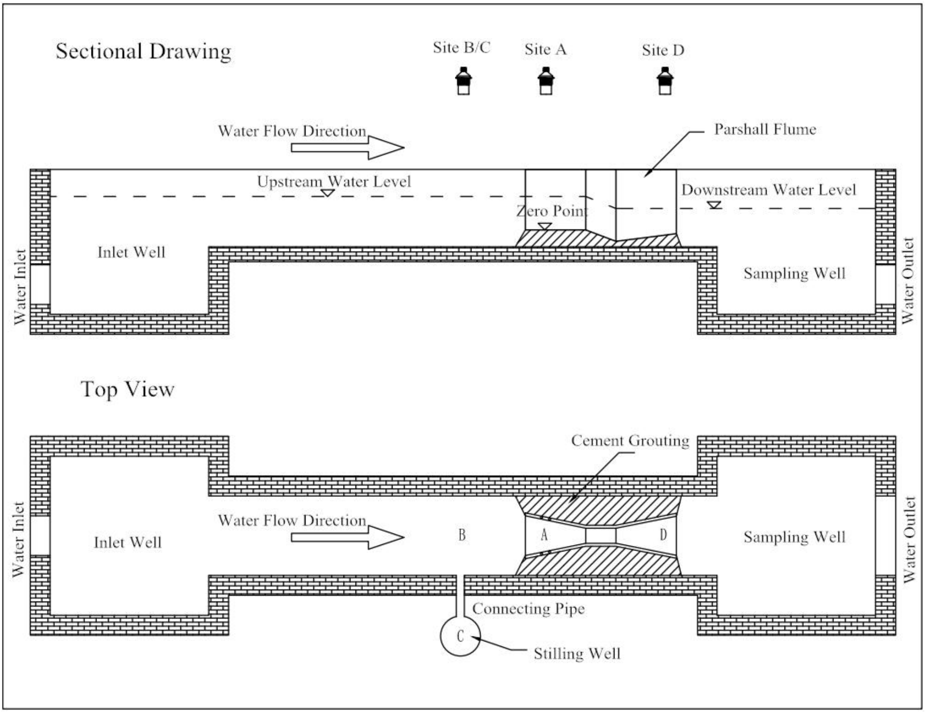
Sectional Drawing
Site B/C
Site A
Site D
Water Flow Direction
Parshall Flume
Upstream Water Level
Downstream Water Level
Zero Point
Inlet Well
Sampling Well
Water Inlet
Water Outlet
Top View
Cement Grouting
Water Flow Direction
B
A
D
Connecting Pipe
C
Stilling Well

Civil Construction Diagram of the Channel

Notice:

- When 1# or 2# Parshall flume is used, it is recommended to install the probe on Site B/C because Site A is narrow.
- When there is foam or floating objects on the liquid surface, the instrument shall be installed on Site C or in the upstream area for foam interception/filtration.
- The downstream drainage capacity shall be greater than or equal to the upstream inflow; otherwise, the submerged flow will occur to seriously affect the measurement accuracy of the instrument. The liquid level meter shall be installed on Site D for flow compensation. See Menu P57 and Appendix 12 for details.
- In order to ensure the measurement accuracy, it is required to install the ventilation sunshade above the rear cover of the probe, to avoid direct sunlight on the probe.

Installation Method

The probe installation of the open channel flowmeter is shown in the following figure:

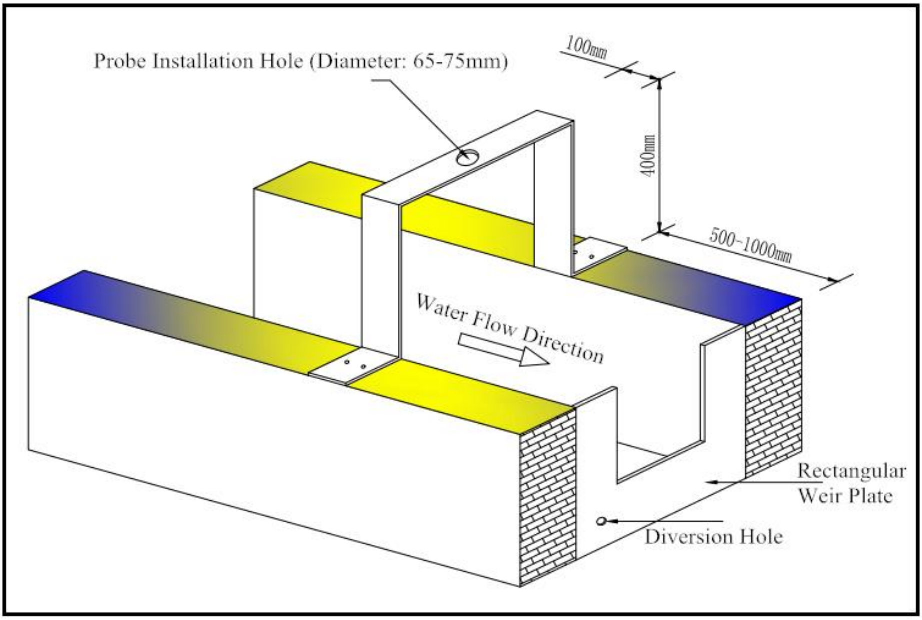
Probe Installation Hole (Diameter: 65-75mm)
100mm
400mm
500~1000mm
Water Flow Direction
Rectangular Weir Plate
Diversion Hole

Notice:

- The open channel flowmeter shall be used in conjunction with the weirs/flumes and weir plates. The instrument supports Parshall flume, triangular weir, rectangular weir, trapezoidal weir, PALMER-BOWLUS flume, Chezy formula, and customized liquid level-flow chart.
- The holder height shall be more than or equal to 400mm to prevent the liquid level from entering the dead band of the instrument.
- The channel width of the holder fixation area shall be more than or equal to 200mm to prevent the instrument from receiving the echoes from the ground.
- In order to ensure the measurement accuracy, it is required to install the ventilation sunshade above the rear cover of the probe, to avoid direct sunlight on the probe.
- If the instrument and probe is exposed to the humid environment for a long time, then the cable inlet and outlet shall be covered with glass cement.

Instrument Display

The instrument has four display modes, such as flow display (main interface), liquid level display, echo display, and history curve.

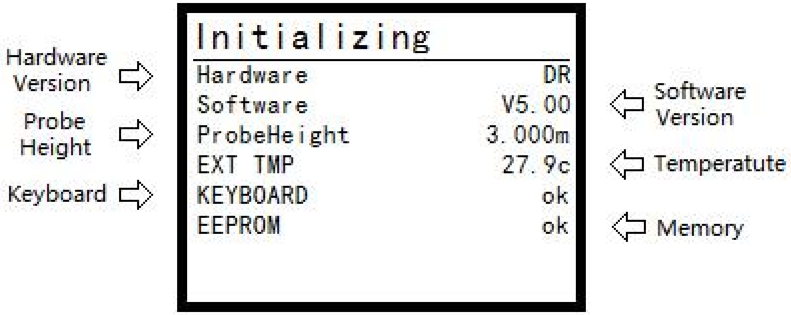
Hardware Version
Probe Height
Keyboard
Initializing
Hardware DR
Software V5.00
ProbeHeight 3.000m
EXT TMP 27.9c
KEYBOARD ok
EEPROM ok
Software Version
Temperatute
Memory

Main Interface

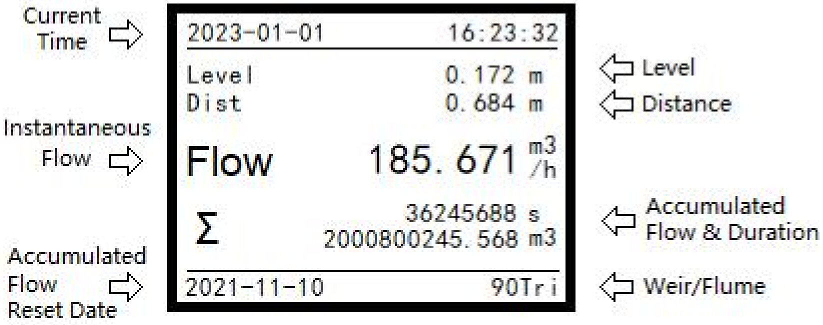
Current Time
Instantaneous Flow
Accumulated Flow Reset Date
2023-01-01 16:23:32
Level 0.172 m
Dist 0.684 m
Flow 185.671 m3/h
Σ 36245688 s
2000800245.568 m3
2021-11-10 90Tri
Level
Distance
Accumulated Flow & Duration
Weir/Flume

Tips:

- Select the display mode in Menu P03.
- Press [▲] to temporarily switch the display mode.
- Release [▲]; 40 seconds later, return to the original display mode.
- Temporarily switch the display mode, and keep 4-20mA current output unchanged.

Basic Parameters (Password for entering the basic parameters menu: “1000”)

P02: 20mA Setup (Measurement Range)

Menu	P02: Enter the maximum instantaneous flow here	
Value	Value Range	0～32,000 m³/h
	Default Value	400 m³/h

P03: Display

	Menu Option	Content	Note
Parameter	Flow	Display instantaneous flow, accumulated flow	Default
	Level & Dist	Display level, distance, and electric current value	
	Echo Curve	Display echo waveform and temperature	
	History	Display history curve	

Flow Display Mode

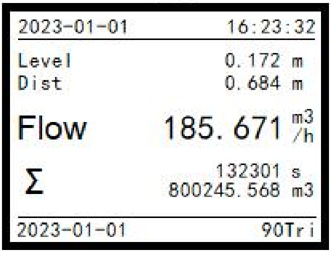

```
2023-01-01          16:23:32
Level               0.172 m
Dist                0.684 m
Flow            185.671 m3/h
Σ                  132301 s
               800245.568 m3
2023-01-01             90Tri
```

Level Display Mode

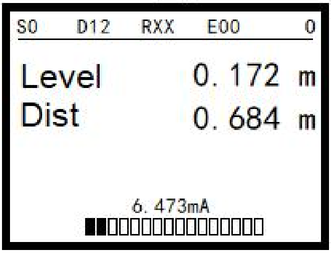

```
S0   D12   RXX   E00      0
Level           0.172 m
Dist            0.684 m
          6.473mA
```

Echo Display Mode

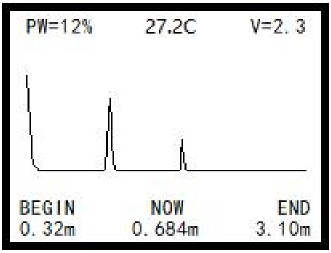

```
PW=12%      27.2C      V=2.3
BEGIN       NOW        END
0.32m       0.684m     3.10m
```

History Curve Mode

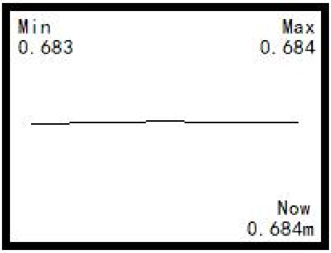

```
Min                      Max
0.683                  0.684
                         Now
                      0.684m
```

Description:

- “S” refers to change rate, and the subsequent values 0～3 respectively represent Fast, Normal, Slow and Slowest.
- “D” refers to damping time, and the subsequent value is expressed in seconds.
- “R” refers to relay status, X represents “Disconnected”, and O represents

"Engaged".

- "E" refers to noise state, and the subsequent value is noise voltage.
- Operating state: X indicates that the waves are being emitted; O indicates that the echoes are being received from the liquid surface.

P04: Probe Height

Menu	P04: Distance from probe surface to zero point	
Value	Value Range	0.350m～10.000m
	Default Value	3.000m

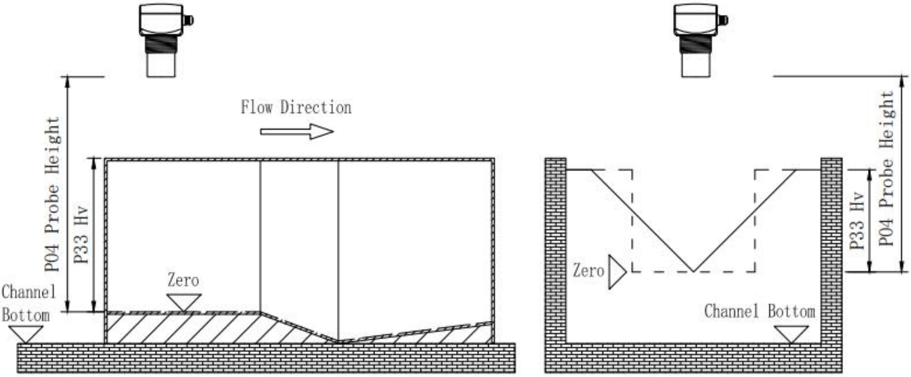
P04 Probe Height
P33 Hv
Flow Direction
Zero
Channel Bottom
Zero
Channel Bottom
P33 Hv
P04 Probe Height

Relationship Diagram between Probe Installation Height and Zero Point

Notice:

- Zero point ≠ Channel bottom (Zero point is the horizontal plane when the flow is zero.)
- Menu P04 = Actual liquid level + Distance displayed on the instrument (Dist)

P05: Response

Reasonably select the change rate of the instrument according to the liquid level change rate.

Parameter	Fast	Default
	Normal	
	Slow (Liquid level change ≤ 50cm/minute)	
	Slowest	

Notice:

- The instrument’s change rate and damping time jointly affect the data stability.
- If the change rate is slower, then the damping is stronger, and the data stability is better, but the corresponding data change slowly.

P06: Dead Band

Set the user’s dead band to shield the impact of the extension pipe orifice, step and beam on instrument measurement.

Value	Value Range	0～10.000m
	Default Value	0.000m

Notice:

- **When the user’s dead band is less than or equal to the probe’s inherent dead band, the user’s dead band is invalid. The probe’s inherent dead band is shown in the instrument label.**
- **The liquid level is not allowed to enter the dead band! The distance from the liquid level to the probe surface shall not be less than or equal to the user’s dead band!**
- **If the liquid level enters the dead band, then the instrument doesn’t work normally, and the resulting accident is not related to the manufacturer!**

P07: Language

Parameter	English	Default
	Chinese	

P08: Dist Unit

Parameter	Meter	Default
	Feet	

P10 - P15: Logic Relay 1-6

Parameter	Value Range	0.000m ~ +10.000m
	Default	< +0.00m

The instrument has two types of relay control logics, including simple logic (one logic) and complicated logic (two logics), as shown in the following figure:

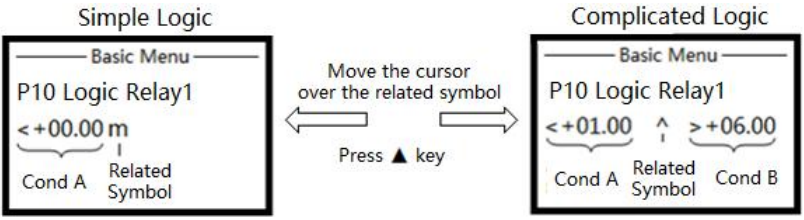
Simple Logic
Basic Menu
P10 Logic Relay1
< +00.00 m
Cond A
Related Symbol
Move the cursor over the related symbol
Press ▲ key
Complicated Logic
Basic Menu
P10 Logic Relay1
< +01.00 ^ > +06.00
Cond A
Related Symbol
Cond B

- When the liquid level meets Condition A, the relay is sucked.
- When Condition A is not satisfied, the relay is disconnected.

- When the liquid level meets Condition A, the relay is sucked.
- When the liquid level meets Condition B, the relay is disconnected.
- When the liquid level does not meet Condition A and Condition B, the relay status is maintained.

For example (It is assumed that the P16 relay buffer is 0.030m):

Example 1: “> +03.00 m” indicates that, the relay is sucked when the sludge level is more than 3.00m, and the relay is disconnected when the sludge level is less than 2.97m.

Example 3: “> +06.00 ^ < +01.00” indicates that, the relay is sucked when the sludge level is more than 6.00m, and the relay is released when the sludge level is reduced to 1.00m. This logic can be used for drainage wells.

Example 4: “< +01.00 ^ > +06.00” indicates that, the relay is sucked after the sludge level is reduced to 1.00m, and the relay is released after the sludge level rises to 6.00m. This logic can be used for inlet wells.

P16: Relay Buffer

In order to reduce the frequent action of the critical level, the relay often needs to wait until the liquid level is higher/lower than the logic value to a certain extent, before it acts. This is relay buffer.

Parameter	Value Range	0.000m ~ 1.000m
	Default	0.030m

P30: Select Weir

	Option	Description	Note
Parameter	90Tri	90° triangle weir	Appendix 2
	Bar01 - Bar18	Parshall flume 1-18	Appendix 1
	Rect0 - Rect8	Rectangular weir 0-8	Appendix 3
	Rect9	user-defined Rectangular weir	
	Trap1 – Trap6	Trapezoidal thin-wall weir 1-6	Appendix 4
	PB_01 – PB_07	Palmer-Bowlus flume 1-7	Appendix 5
	H_Tri	Ring test triangle weir, θ=90, p/B=0.2	
	H_Rec	Ring test rectangular weir, b=500mm, B=1000mm, p=250mm	
	Other	Other weirs / flumes	
	Chezy	Chezy formula	Appendix 7
	Table	Customized liquid level-flow chart	Appendix 6
Related Menu	P31 C; P32 N; P33 Hv; P34 Lv;		

- Different weirs/flumes have different values C and N. After the weir/flume is changed, the values C and N are modified accordingly.
- See Appendixes 1-5 for weir/flume size, Value C, and Value N.
- When P30 = Rec9, it is necessary to manually input P33/P37/P38/P39;
- When P30 = Other, enter Value C and Value N in P31 and P32.
- When P30 = Table, enter the liquid level-flow chart. See Appendix 6.
- When P30 = Chezy, enter the additional parameter. See Appendix 7.

P31: Flow Coefficient(C)

Menu	Value C (Vary with P30)	
Parameter	Value Range	0.000m2/s～32.000m2/s

Tips: At the time of P31=0.000 and P03 =Level, the instrument is used as the liquid level meter, and the liquid level is output through 4-20mA.

P32: Flow Index(N)

Menu	Value N (Vary with P30)	
Parameter	Value Range	0.000～9.999

P33: Weir Depth(Hv)

Parameter	Value Range	0.000m～9.999m
	Default	3.000m

Notice: When the liquid level is more than or equal to Hv, the instantaneous flow remains unchanged.

P34: Min Water Head (Lv)

Parameter	Value Range	0.000m～1.000m
	Default	0.005m

Notice: When the liquid level is less than or equal than Lv, the instantaneous flow is ignored. When the liquid level is more than Lv, the instrument has the flow.

P35: Flow Unit

Parameter	m3/h	Cubic meter/hour	Default
	m3/s	Cubic meter/second	
	L/s	Liter/second	
	Gal/min	(USA) Gallon/minute	
	Gal/hour	(USA) Gallon/hour	
	mGal/day	(USA) Million gallons/day	

P36: Flow Records

At 15:00 every day, the instrument stores the total accumulated flow FIQ. Through the menu, enter the date to view the total accumulated flow FIQ at 15:00 on that day.

If the flow record of the day presents “None Record”, this indicates that the instrument is in the power-off state on that day.

For example, to query the daily flow on December 20, 2025

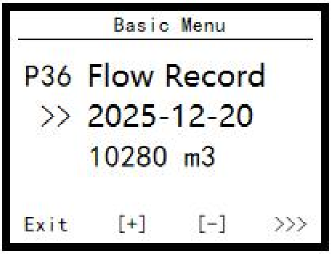

P36 Flow Record
>> 2025-12-20
10280 m3

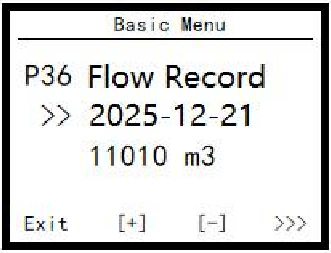

P36 Flow Record
>> 2025-12-21
11010 m3

a: first input the time 2025-12-20, it will display 10280m3

b: then input the time 2025-12-21, it will display 11010m3

c: Subtract the cumulative flow of the two successive days 11010-10280 = 730m3 to obtain the daily flow of 2025-12-20

P37: Channel Width(B)

Menu	Input the width of the channel(Only P30 = Rec9)	
Parameters	Value range	0.150m ~ 9.999m3/s
	Default	1.000m
	Require	≥ P38 b

See Appendix 3 for details

P38: Weir Width(b)

Menu	Input the width of the Weir(Only P30 = Rec9)	
Parameters	Value range	0.150m ~ 9.999m3/s
	Default	1.000m
	Require	≥ 0.15m

P39: Weir Height(p)

Menu	Input the top height of the Weir(Only P30 = Rec9)	
Parameters	Value range	0.100m ~ 9.999m3/s
	Default	0.100m
	Require	≥ 0.100m

Advanced Parameters

The password of entering the advanced parameters menu is “0101”.

Setting of advanced parameters shall be guided by the manufacturer!

P40: Damping Time

Value	Value Range	0～250s
	Default Value	20s

Notice: The less the damping is, the worse the data stability is; the greater the damping is, the better the data stability is. Please reasonably select the parameter.

P41: Alarm Output

Menu	P41: Select the output current at the time of giving an alarm		
Parameter	22mA	The output current is 22mA at the time of giving an alarm	
	3.8mA	The output current is 3.8mA at the time of giving an alarm	
	Hold	No alarm is given	Default

Notice:

- When the liquid level enters the danger zone, the instrument gives an alarm according to the output current set in Menu P41.
- When the instrument fails to receive echoes for 21 consecutive minutes, the instrument gives an alarm according to the output current set in Menu P41.

P42: Delay Alarm

Value	Value Range	0～250s
	Default Value	5s

When the fault delay counter terminates, the instrument reports the fault to the PLC based on the output current set in the menu P41.

P43: Threshold

If the instrument grounding cannot solve the interference, the threshold is set to improve the anti-interference capacity of the instrument.

Parameter	0.3v	Ignore echoes less than or equal to 0.3v	Default

	0.6v	Ignore echoes less than or equal to 0.6v	
	0.9v	Ignore echoes less than or equal to 0.9v	
	1.2v	Ignore echoes less than or equal to 1.2v	
	1.5v	Ignore echoes less than or equal to 1.5v	

Notice:

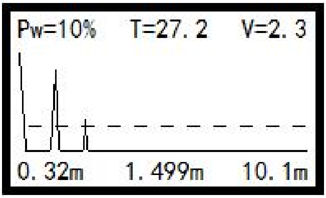

- The dotted line in the right figure refers to the threshold.
- When the threshold is 0.3v, the dotted line is not displayed.
- Increasing the threshold can reduce the sensitivity of the instrument.

P44: Output Power

Parameter	0～30%	Output power varies between 0 and 30%	
	0～60%	Output power varies between 0 and 60%	
	0～100%	Output power varies between 0 and 100%	Default
	100%	Output power is always 100%	

The lower the output power is, the smaller the dead band and measurement range become. The higher the output power is, the larger the dead band and measurement range become.

P45: First Echo Coefficient

Menu	P45	
Value	Value range	1.0～5.0 times
	Default value	×1.0 time

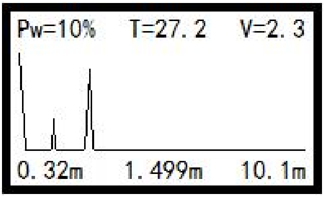

There are 2 echoes as shown in the right figure.

If it is confirmed that the first echo is liquid reflection echo, rather than orifice echo, try to increase first wave coefficient, so that the first echo is higher than the second echo.

P48: Safety Dist.

Menu	P48	
Value	Value range	0.000～5.000m
	Default value	0.100m

Set a safety distance outside block district, to prevent liquid level entering block district and causing accidents.

When liquid level is within safety distance, the instrument sends an alarm through 4～20mA current.

The right figure shows relative relation among block district, safety-Dist and measurement range of liquid level.

① Block Dist

② Safety Dist

③ Measurement range of liquid level

④ Profe Height

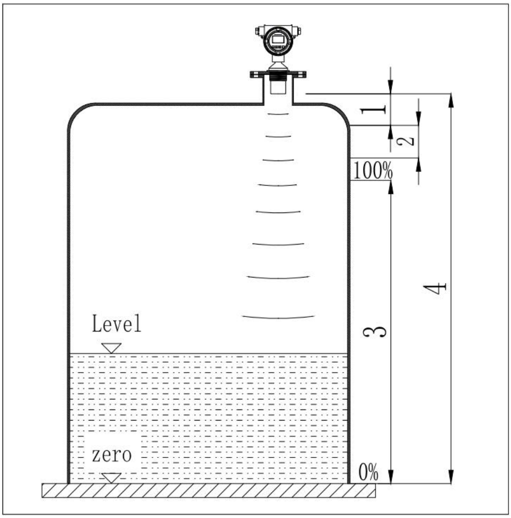

P50: ID

Value		RS485	HART
	Value Range	1～99#	0～15#
	Default Value	1#	0#

Notice: During HART communication, at the time of ID≠0#, the instrument outputs the fixed electric current of 4.000mA, which is not related to the liquid level/distance of the instrument.

P51: Baud

Parameter	1200Bd, 2400Bd, 4800Bd, 9600Bd, 19200Bd, 38400Bd	Default: 9600Bd

Notice: Modify baud rate, which becomes effective after exiting from the menu.

P53: Float Order

Parameter	1234	Sequence of 4-byte floating point number: 1234	Default
	4321	Sequence of 4-byte floating point number: 4321	
	3412	Sequence of 4-byte floating point number: 3412	
	2143	Sequence of 4-byte floating point number: 2143	

Please pay attention to DCS/PLC’s requirements for sequence of 4-byte floating point number. The instrument is consistent with DCS/PLC’s sequence of floating point number.

P54: COMM Test

The menu displays the received upper computer data, as well as the data sent by the instrument, to assist the upper computer programmers in debugging communication.

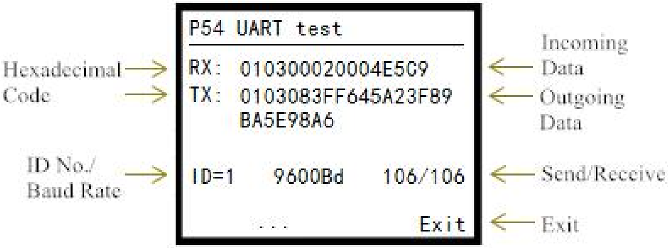

```
P54 UART test
RX:  010300020004E5C9
TX:  0103083FF645A23F89
     BA5E98A6

ID=1     9600Bd     106/106
          ...           Exit
```

Notice:

- ➢ When RX data are not correct, the instrument does not return the data to the PLC, and it shows the error message at TX.

P55: Set Time

Value	Value Range	January 1, 2000 – December 31, 2099

P56: FIQ Clear

When the accumulated flow is reset, the current time is used as the starting time of accumulated flow, and the flow records are emptied.

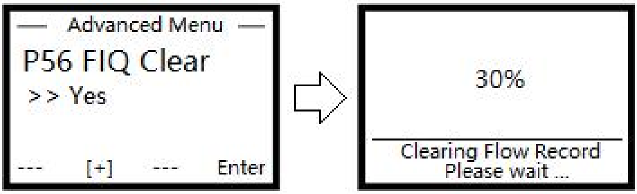

```
— Advanced Menu —
P56 FIQ Clear
>> Yes

---   [+]   ---   Enter
```

```
30%

Clearing Flow Record
Please wait ...
```

Notice:

- ➢ After selecting Yes, exit from the menu, so that the instrument starts reset. The whole process needs to take 3 minutes. It is forbidden to power off or operate the keyboard. After clearing, the instrument is automatically reset and restarted.

P58: Power-Fail ACC

The flow and duration generated during the power outage are included in the total accumulated flow and duration

Parameter	Off	Default
	On	

P57: 20mA Setting Value of Downstream Instrument

Value	Value Range	0～10.000m
	Default Value	0.000m

Notice:

- When the downstream drainage capacity is less than or equal to the upstream inflow, the submerged flow will occur. At this point, the instrument needs to use the downstream water level to correct the flow.
- After the instrument is installed in the downstream area, please connect the 4-20mA simulation current of the downstream instrument to the 4-20mA Input Port of the instrument, and then enter the 20mA setting value of the downstream instrument in P57. See Appendix 12 for details.
- At the time of P57 =0.000m, there is no downstream instrument.
- At the time of P57≠0.000m, the instrument display is shown below.

Flow Display Mode

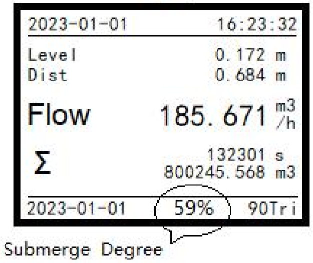

```
2023-01-01          16:23:32
Level                0.172 m
Dist                 0.684 m
Flow           185.671 m3/h
Σ                   132301 s
              800245.568 m3
2023-01-01     59%    90Tri
```

Level Display Mode

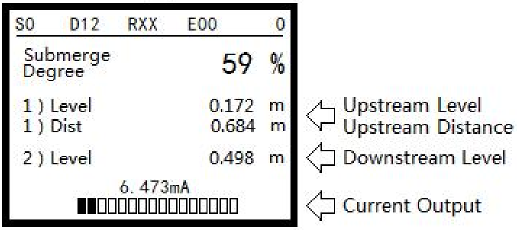

```
S0    D12    RXX    E00      0
Submerge Degree        59  %
1 ) Level           0.172  m
1 ) Dist            0.684  m
2 ) Level           0.498  m
             6.473mA
```

P59: Downstream Instrument Installation Height:

Value	Value Range	0～10.000m
	Default Value	0.000m

- P59 =0.000m (when the downstream instrument is the liquid level meter);
- When the downstream instrument is the distance meter, please enter the installation height of the distance meter in the menu.

P60: Simulate Current Output

Menu	P60: Simulate output the integer current	
Value	Value Range	4.000～20.000mA

P62: Pulse Width

The instrument can output pulse signal, and upload the accumulated flow to the counter, flow accumulator or PLC.

Value	Value Range	6～100ms
	Default Value	6ms

P63: Pulse Equal

Menu	P63: Select the flow corresponding to one pulse	
Value	Value Range	0.01～1000m3
	Default Value	1m3

Notice: Instantaneous flow × Pulse width/Pulse equivalent shall be less than or equal to 500ms; otherwise, the pulse will not be output. Please reasonably select P62 and P63 based on instantaneous flow.

P64: Work Record

The instrument can store 480 logs, circularly record startup time, shutdown time, setting time, and flow rate reset time, as well as new and old values of operations such as changing weir/flume and modifying probe height.

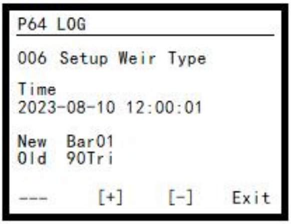

```
P64 LOG
006 Setup Weir Type
Time
2023-08-10 12:00:01
New  Bar01
Old  90Tri
---    [+]    [-]    Exit
```

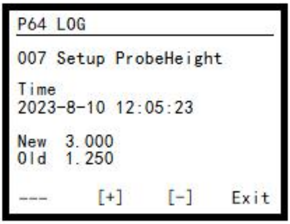

```
P64 LOG
007 Setup ProbeHeight
Time
2023-8-10 12:05:23
New  3.000
Old  1.250
---    [+]    [-]    Exit
```

P65: Print

Display and print the real-time liquid level and flow, conduct the flow setting, and show the accumulated flow of the day/month/year

Parameter	Para	Instrument parameters set

	Real	Real-time liquid level, instantaneous flow, accumulated flow, and duration
	DFIQ	Accumulated flow at 15:00 every day for the last 8 days (See Menu P36)
	MFIQ	Accumulated flow at 15:00 on the first day of every month for the last 8 months
	YFIQ	Accumulated flow at 15:00 on the first day of every year for the last 8 years

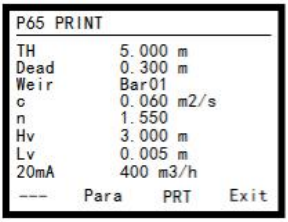

```
P65 PRINT
TH          5.000 m
Dead        0.300 m
Weir        Bar01
c           0.060 m2/s
n           1.550
Hv          3.000 m
Lv          0.005 m
20mA        400 m3/h
---     Para     PRT     Exit
```

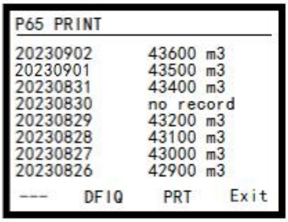

```
P65 PRINT
20230902       43600 m3
20230901       43500 m3
20230831       43400 m3
20230830       no record
20230829       43200 m3
20230828       43100 m3
20230827       43000 m3
20230826       42900 m3
---     DFIQ     PRT     Exit
```

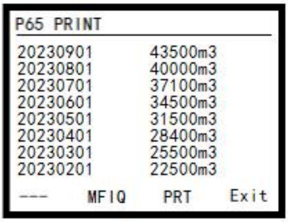

```
P65 PRINT
20230901       43500m3
20230801       40000m3
20230701       37100m3
20230601       34500m3
20230501       31500m3
20230401       28400m3
20230301       25500m3
20230201       22500m3
---     MFIQ     PRT     Exit
```

Note: Press [→] to output the displayed content to the printer. Please contact the distributor for printer model.

P66: Temperature Sensor's Delay

When the temperature delay is adjusted, the instrument can read the temperature value inside the temperature sensor

Parameter	12us	Probe cable ≤ 30m	Default
	18us	Probe cable 30～60m	
	24us	Probe cable 60～90m	
	30us	Probe cable 90～120m	
	36us	Probe cable 120～150m	

Cable length, wire diameter, and temperature can affect signal transmission delay time. The delay/cable length relationship in the table is for reference only.

P99: Load Param

Parameter	No	Refuse to restore the parameters	Default
	Yes	Restore the factory parameters	

Additional Parameters (Password: “0110”)

T00: Level_Val

Menu	Enter the liquid level interval value (only P30 = Table)	
Parameter	Default Value	0.000m～2.000m

T01 – T10: Level_Flow_Table

Menu	Enter the liquid level-flow chart (only P30 = Table)	
Parameter	Default Value	0.000m～32.000m3/s

Please see Appendix 6 for details on how to use the customized liquid level-flow chart.

T35: Slope

Menu	Hydraulic slope = Difference in height/Spacing (only P30 = Chezy)	
Parameter	Value Range	0.000m～9.999
	Default Value	0.002

Please see Appendix 7 for details on how to use Chezy formula to measure the flow.

T37: Roughness

Menu	Enter the roughness of the channel material (only P30 = Chezy)	
Parameter	Value Range	0.000m～9.999
	Default Value	0.020

Please see Appendix 7 to obtain the approximate roughness based on the channel material, and then make fine adjustments according to the actual flow.

T37: Top Width

Menu	Enter the top width of the channel (only P30 = Chezy)	
Parameter	Value Range	0.000m～20.000m

T38: Bottom Width

Menu	Enter the bottom width of the channel (only P30 = Chezy)	
Parameter	Value Range	0.000m～20.000m

Appendix 1: Parshall Flume

Material: 8mm-thick glass reinforced plastics/304 stainless steel

Attentions

- The size of j is related to channel installation, and shall be determined by the user according to the on-site conditions.
- The upstream area of Parshall flume shall have the flat section that is more than or equal to 3-5 times the channel width, so that the water can smoothly enter Parshall flume.
- After the water smoothly passes through Parshall flume, the water flow shall be free. The downstream drainage is unobstructed to avoid submerged flow.

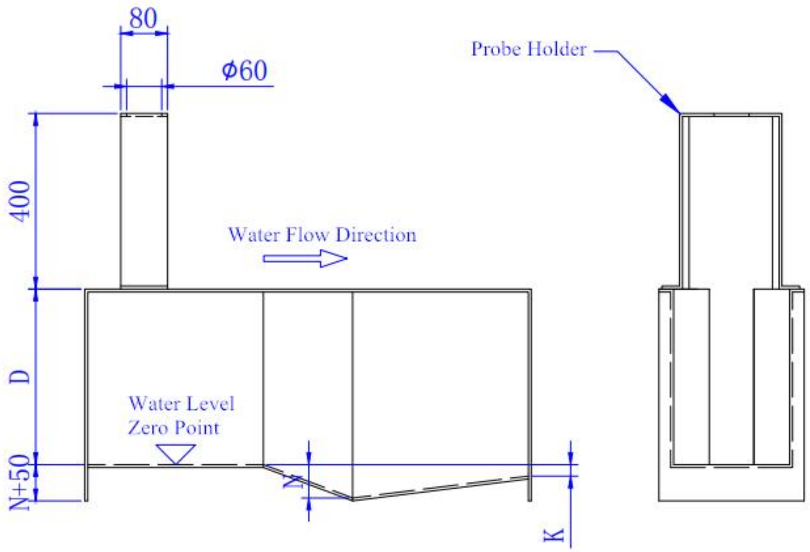
80
ϕ60
Probe Holder
400
Water Flow Direction
D
Water Level
Zero Point
N+50
N
K

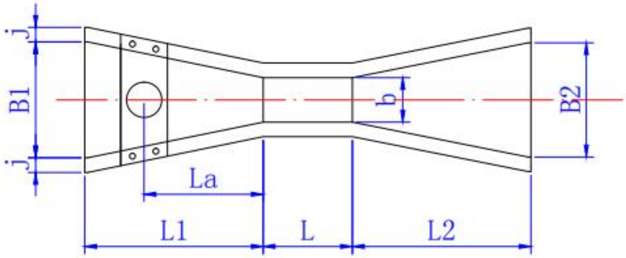
j
B1
j
b
B2
La
L1
L
L2

No.	Flow Range (m3/h)		Waterhead Range (mm		Throat Section(mm			Contraction Section (mm			Diffusion Section (mm)			Wall Height (mm	Critical Value	Flow Parameter (m2/s)	
	Q (min)	Q (max)	h (min)	h (max)	b	L	N	B1	L1	La	B2	L2	K	D	Degree of Submergence	C	n
b01	0.3	20	15	210	25	76	29	167	356	237	93	203	19	230	50%	0.0604	1.550
b02	0.6	48	15	240	51	114	43	214	406	271	135	254	22	260	50%	0.1207	1.550
b03	2.8	115	30	330	76	152	57	259	457	305	178	305	25	460	50%	0.1771	1.550
b04	5.4	400	30	450	152	305	114	400	610	407	394	610	76	610	60%	0.3812	1.580
b05	9.0	903	30	600	228	305	114	575	864	576	381	457	76	770	60%	0.5354	1.530
b06	10.8	900	30	600	250	600	230	780	1325	900	550	920	80	800	60%	0.561	1.513
b07	12.6	1440	30	750	300	600	230	780	1350	902	600	920	80	800	60%	0.679	1.521
b08	16.2	2268	30	750	450	600	230	840	1425	948	750	920	80	950	60%	1.038	1.537
b09	45.0	3060	50	750	600	600	230	1020	1500	1000	900	920	80	950	60%	1.403	1.548
b10	90.0	3960	60	750	750	600	230	1380	1575	1074	1050	920	80	950	60%	1.772	1.557
b11	108.0	4500	60	750	900	600	230	1560	1650	1121	1200	920	80	950	60%	2.147	1.565
b12	108.0	5400	60	800	1000	600	230	1680	1705	1161	1300	920	80	1000	70%	2.397	1.569
b13	126.0	7200	60	800	1200	600	230	1920	1800	1227	1500	920	80	1000	70%	2.904	1.577
b14	162.0	9000	60	800	1500	600	230	2280	1950	1329	1800	920	80	1000	70%	3.668	1.586
b15	288.0	10800	80	800	1800	600	230	2640	2100	1427	2100	920	80	1000	70%	4.440	1.593
b16	342.0	12960	80	800	2100	600	230	3000	2250	1534	2400	920	80	1000	70%	5.222	1.599
b17	360.0	14400	80	800	2400	600	230	3360	2400	1636	2700	920	80	1000	70%	6.004	1.605
b18	576.0	29800	90	1070	3050	910	343	4760	4270	1830	3680	1830	152	1220	80%	7.463	1.600

Appendix 2: Triangular Weir

Material: 15mm-thick glass reinforced plastics, or PVC (If the flow is larger, the wall thickness is increased accordingly.)

Attentions: j is the part of the weir plate embedded into the channel wall. The size shall be determined by the user according to the on-site conditions.

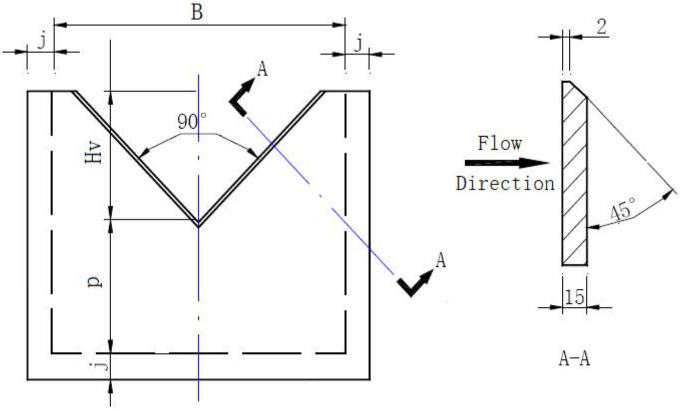

General Size and Flow Parameter of Triangular Weir (Unit: mm)

No.	Flow Range (L/s)		Applicable Channel	B	Hv	p	Flow Parameter	
	Q (min)	Q (max)	Width × Height				C (m^2/s)	n
Tri0	0.08	6	275×220	275	110	110	1.343	2.5
Tri1	0.08	11	360×288	360	144	144		
Tri2	0.08	22	475×380	475	190	190		
Tri3	0.08	34	560×448	560	224	224		
Tri4	0.08	51	660×528	660	264	264		
Tri5	0.08	76	775×620	775	310	310		
Tri6	0.08	110	900×720	900	360	360		
Tri7	0.08	171	1075×860	1075	430	430		
Tri8	0.08	250	1250×1000	1250	500	500		
Tri9	0.08	378	1475×1180	1475	590	590		

Appendix 3: Rectangular Weir

Material: 15mm-thick glass reinforced plastics, or PVC (If the flow is larger, the wall thickness is increased accordingly.)

Attentions: j is the part of the weir plate embedded into the channel wall. The size shall be determined by the user according to the on-site conditions.

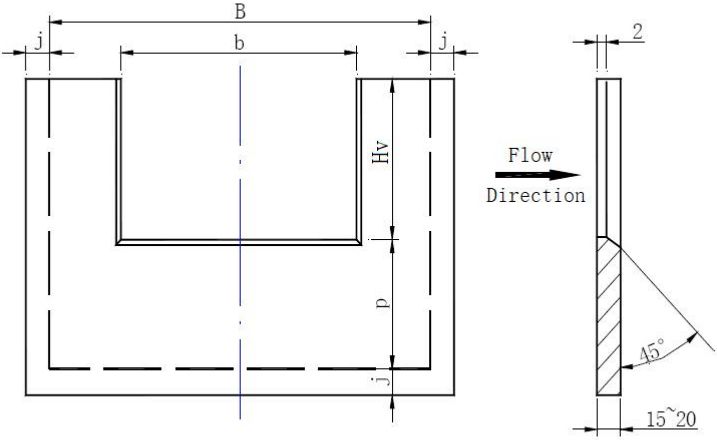

General Size and Flow Parameter of Rectangular Weir (Unit: mm)

No.	Flow Range (L/s)		Applicable Channel	B	b	Hv	p	Flow Parameter	
	Q (min)	Q (max)	Width × Height					C (m^2/s)	n
Rec0	0.36	24	500×500	500	200	163	337	0.356	1.55
Rec1	0.61	54	650×650	650	260	239	411	0.461	1.55
Rec2	1.28	115	750×750	750	375	308	442	0.668	1.55
Rec3	2.50	223	850×850	850	510	387	463	0.922	1.55
Rec4	5.14	462	1000×1000	1000	700	501	499	1.297	1.55
Rec5	10.33	926	1250×1250	1250	875	683	567	1.635	1.55
Rec6	20.17	1807	1450×1450	1450	1160	857	593	2.272	1.55
Rec7	39.17	3512	1800×1800	1800	1440	1142	658	2.873	1.55
Rec8	81.94	7332	2150×2150	2150	1935	1453	697	4.183	1.55
Rec9	user-defined			P37	P38	P33	P39	Auto	

Appendix 4: Trapezoidal Weir

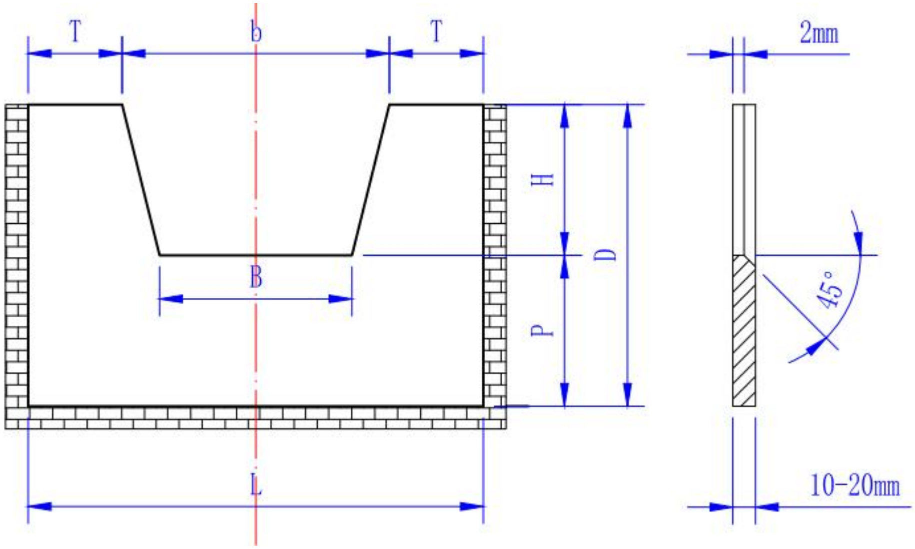

General Size and Flow Parameters of Trapezoidal Weir

No.	Flow Range (L/s)	B (mm)	b (mm)	H (mm)	T (mm)	P (mm)	D (mm)	L （mm）	C (m2/s)	n
Trap1	2～12	250	317	133	83	83	267	643	0.465	1.5
Trap2	10～63	500	608	217	167	167	433	1102	0.930	1.5
Trap3	30～178	750	900	300	250	250	600	1560	1.395	1.5
Trap4	61～365	1000	1192	383	333	333	767	2018	1.860	1.5
Trap5	102～640	1250	1483	467	417	417	933	2477	2.325	1.5
Trap6	165～1009	1500	1775	550	500	500	1100	2935	2.790	1.5

Thereinto, D contains the skirt of 50mm; L contains the skirt of 80mm on each side. The skirt shall be embedded into the channel wall.

Appendix 5: PALMER-BOWLUS Flume

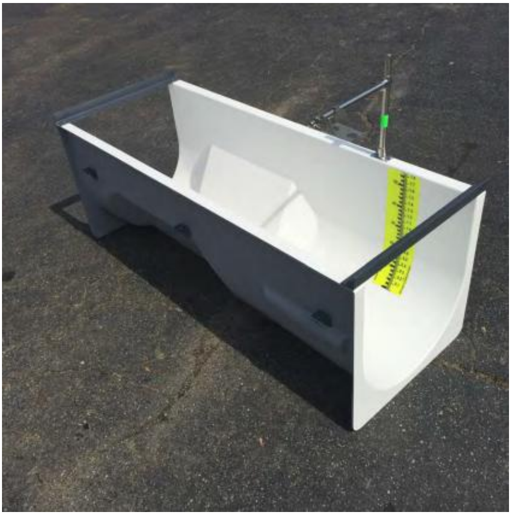

General Flow Parameters of PB Flume:

PALMER-BOWLUS Flume (PB Flume)						
No.	Caliber		Min Flow (L/s)	Max Flow (L/s)	C(m^2/s)	N
PB_01	4"	DN100	0.06	6	0.501	1.957
PB_02	6"	DN150	0.09	15	0.562	1.903
PB_03	8"	DN200	0.09	31	0.749	1.972
PB_04	10"	DN250	0.16	55	0.820	1.953
PB_05	12"	DN300	0.26	86	0.888	1.936
PB_06	15"	DN375	0.50	150	0.975	1.906
PB_07	18"	DN450	0.80	237	1.077	1.898

Appendix 6: Parameter Setting of Liquid Level-Flow Chart

For example: How to set the parameters according to the following liquid level-flow chart

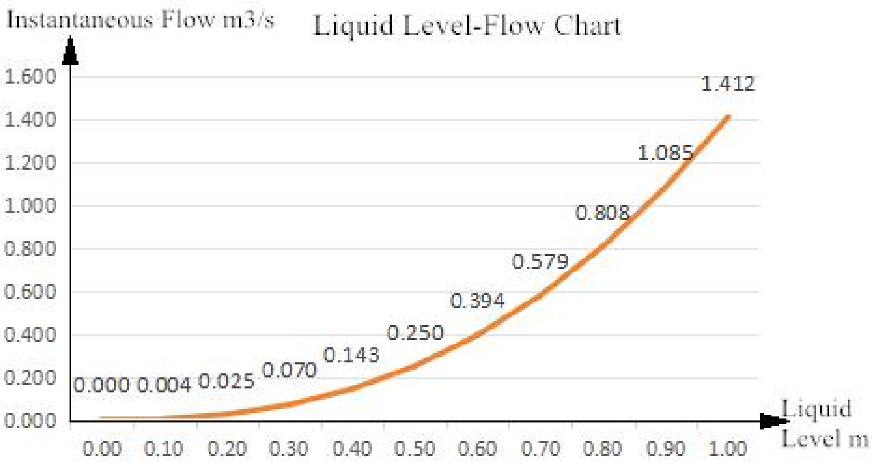

Menu No.	Menu Name	Parameter Setting
P30	Weir/Flume Type	Table
P33	Weir Depth Hv	1.000 m
T00	Liquid Level Interval	0.100 m
T01	Flow of Liquid Level Interval *1	0.004 m3/s
T02	Flow of Liquid Level Interval *2	0.025 m3/s
T03	Flow of Liquid Level Interval *3	0.070 m3/s
T04	Flow of Liquid Level Interval *4	0.143 m3/s
T05	Flow of Liquid Level Interval *5	0.250 m3/s
T06	Flow of Liquid Level Interval *6	0.394 m3/s
T07	Flow of Liquid Level Interval *7	0.579 m3/s
T08	Flow of Liquid Level Interval *8	0.808 m3/s
T09	Flow of Liquid Level Interval *9	1.085 m3/s
T10	Flow of Liquid Level Interval *10	1.412 m3/s

Appendix 7: Chezy Formulae

Chezy formula describes the relationship between water velocity and water depth.

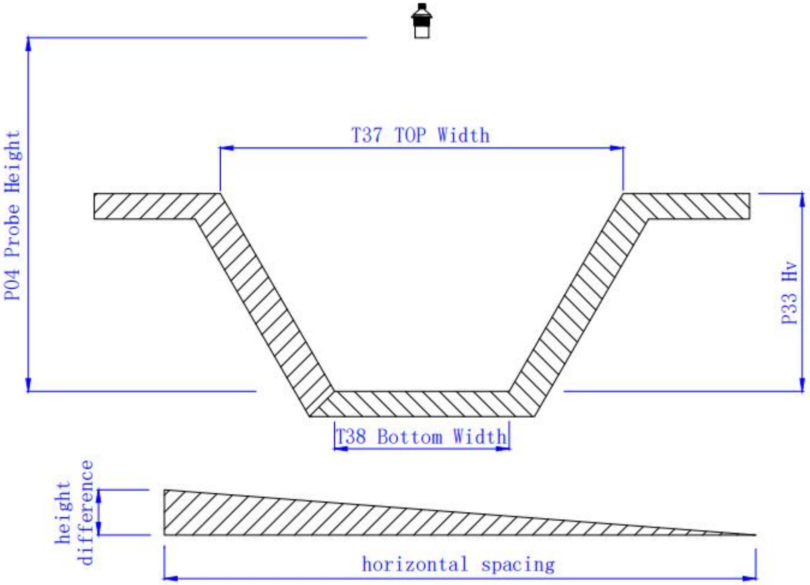

Parameter Setting Steps:

1. Enter the probe installation height in Menu P04, exit from the menu, and check if the liquid level value displayed on the instrument is consistent with the actual conditions. If there is an error, it is required to repeat the step, and make fine adjustments for the data in Menu P04, so that the liquid level value displayed on the instrument is consistent with the actual conditions (the error is less than or equal to 3mm).
2. The weir/flume is set to be “Chezy” in Menu P30.
3. Enter the depth of the weir in Menu P33 Hv.
4. Enter the hydraulic slope in Menu T35. (Hydraulic slope = Difference in height/Horizontal spacing)
5. Enter the roughness in Menu T36. (According to the channel material, check the following table to obtain the value, and then make fine adjustments based on the actual flow.)
6. Enter the top width of the channel in Menu T37.
7. Enter the bottom width of the channel in Menu T38. (If the channel is rectangular, T37 is equal to T38.)

Notice:

- P33, T37 and T38 are the cross-sectional dimensions of the narrowest channel within 100-200m downstream from below the instrument probe.

Roughness of Soil Channel

Channel Characteristics	Flow m^3/s	Irrigation Channel	Drainage Channel
Flatness, smoothness, good maintenance	>20	0.0200	0.0225
Flatness, smoothness, general maintenance		0.0225	0.0250
Stony channel bed,poor maintenance		0.0250	0.0275
Flatness, smoothness, good maintenance	1-20	0.0225	0.0250
Flatness, smoothness, general maintenance		0.0250	0.0275
Stony channel bed,poor maintenance		0.0275	0.0330
Flatness, smoothness, good maintenance	<1	0.0250	0.0275
Flatness, smoothness, general maintenance		0.0275	0.0300
Stony channel bed,poor maintenance		0.0300	0.0350

Roughness of Stone Channel

Channel Surface Characteristics	Roughness
Good finishing	0.0250
Medium finishing without projecting portion	0.0300
Medium finishing with projecting portion	0.0330
No finishing, with projecting portion	0.0350-0.0450

Roughness of Anti-seepage Channel

Anti-seepage Channel Structure Class and Characteristics		Roughness
Clay/clay and sand mixed soil/mixed bentonite	Flatness, smoothness, good maintenance	0.0225
	Flatness, smoothness, general maintenance	0.0250
	Flatness, smoothness, poor maintenance	0.0275
Stone masonry	Mortared masonry of stones and slab stones	0.0150-0.0230
	Mortared masonry of block stones	0.0200-0.0250
	Dry masonry of block stones	0.0250-0.0330

	Mortared masonry of pebbles	0.0230-0.0275
	Good dry masonry of pebbles	0.0250-0.0325
	General dry masonry of pebbles	0.0275-0.0375
	Rough dry masonry of pebbles	0.0325-0.0425
Concrete	Polished cement sand surface	0.0120-0.0130
	Metal formwork pouring, flatness,smooth surface	0.0120-0.0140
	Planed wood formwork pouring,general surface	0.0150
	Rough surface/uneven seam	0.0170
	Poor finishing and maintenance	0.0180
	Prefabricated slab masonry	0.0160-0.0150
	Precast channel	0.0120-0.0160
	Flat gunite surface	0.0150-0.0160
	Rough gunite surface	0.0170-0.0180
	Gunite surface with undulating section	0.0180-0.0250

Appendix 8: HART Command

For HART5.0 Protocol supported by the open channel flow-meter, the commands are shown below:

Command 0	Read identification code
Command 1	Read main variable—instantaneous flow
Command 2	Read instantaneous flow, current and percentage
Command 3	Read current, instantaneous flow, accumulated flow, level and distance
Command 6	Write HART ID
Command 11	Read labeled identification code
Command 12	Read information
Command 13	Read label, descriptor and date
Command 14	Read sensor information of main variable
Command 15	Read equipment information
Command 16	Read the final assembly number
Command 17	Write information
Command 18	Write label, descriptor and date
Command 19	Write the final assembly number
Command 33	Read transmitter variable
Command 34	Write damping value of main variable
Command 35	Write the upper limit and lower limit of measurement range of main variable
Command 36	Present value of main variable is set at the upper limit of measurement range of main variable
Command 37	Present value of main variable is set at the lower limit of measurement range of main variable
Command 40	Enter/quit fixed main variable current mode
Command 43	Present main variable of the equipment is set at zero point
Command 44	Define main variable unit
Command 45	Adjust DAC zero point of main variable current
Command 46	Adjust DAC gain of main variable current
Command 49	Write serial number of main variable sensor

Notice: HART sampling resistance is 250Ω～500Ω.

Appendix 9: Modbus-RTU Communication Protocol

Register Address	Data Content	Format	Unit
0000~0001H	Reserved		
0002~0003H	Level	Float	m
0004~0005H	Distance	Float	m
0006~0007H	Temperature	Float	℃
0008~0009H	Flow Rate	Float	P35
000A~000BH	Total Flow	Float	m3
000C~000DH	Current	Float	mA
000EH	Liquid Level	Int	mm
000FH	Distance	Int	mm
0010H	Temperature	Int	0.1℃
0011H	Electric Current	Int	uA
0012~0013H	Instantaneous Flow	Long	P35/1000
0014~0015H	Accumulated Flow	Long	m3
0016~0017H	Accumulated Duration	Long	Seconds

Default setting of RS485 serial port:Baud rate: 9,600; 1 stop bit; no parity bit; ID: 01

Notice:

1: Menu【P54 Communication Test】 displays incoming/outgoing data.

2: When the instantaneous flow is large and the accumulated flow is more than or equal to 8-digital number, it is recommended to read LONG accumulated flow in the register 0014H-0015H.

For example: Read the data on instantaneous flow and accumulated flow (Function Code: 03H)

Query data frames (8 bytes in total)

Data	01H	03H	00H	08H	00H	04H	C5H	CBH

Response data frames

Data	01H	03H	08H	42H	F1H	00H	00H	46H	B7H	41H	00H	65H	CFH

Thereinto, 0x42F10000 is the floating point number in IEEE754 format, indicating that the instantaneous flow is 120.5m^3/h; 0x46B74100 indicates the accumulated flow of 23,456.5m^3.

Appendix 10: Instrument Dimension Diagram

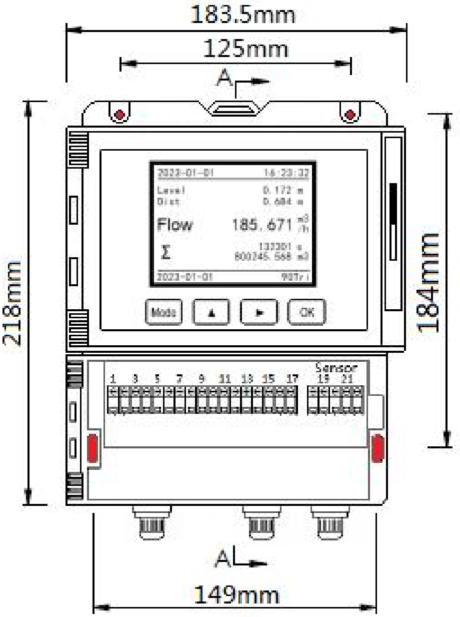
183.5mm
125mm
A
218mm
184mm
2023-01-01 16:23:32
Level 0.172 m
Dist 0.684 m
Flow 185.671 m3/h
Σ
2023-01-01
Mode
▲
►
OK
1 3 5 7 9 11 13 15 17
Sensor
19 21
A
149mm

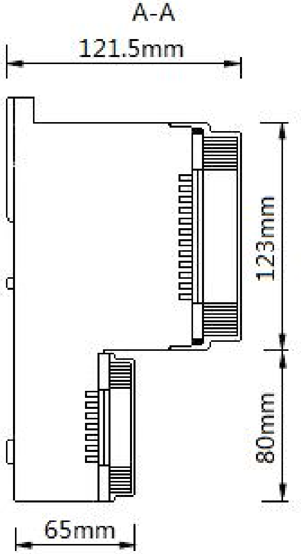
A-A
121.5mm
123mm
80mm
65mm

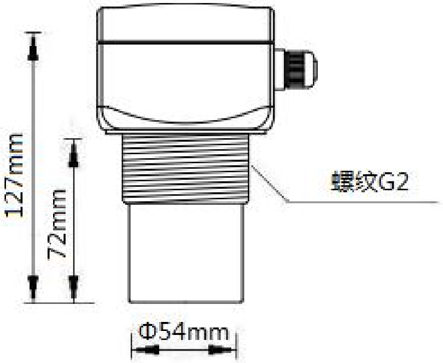
127mm
72mm
螺纹G2
Φ54mm

Appendix 11: Instrument Wiring Diagram

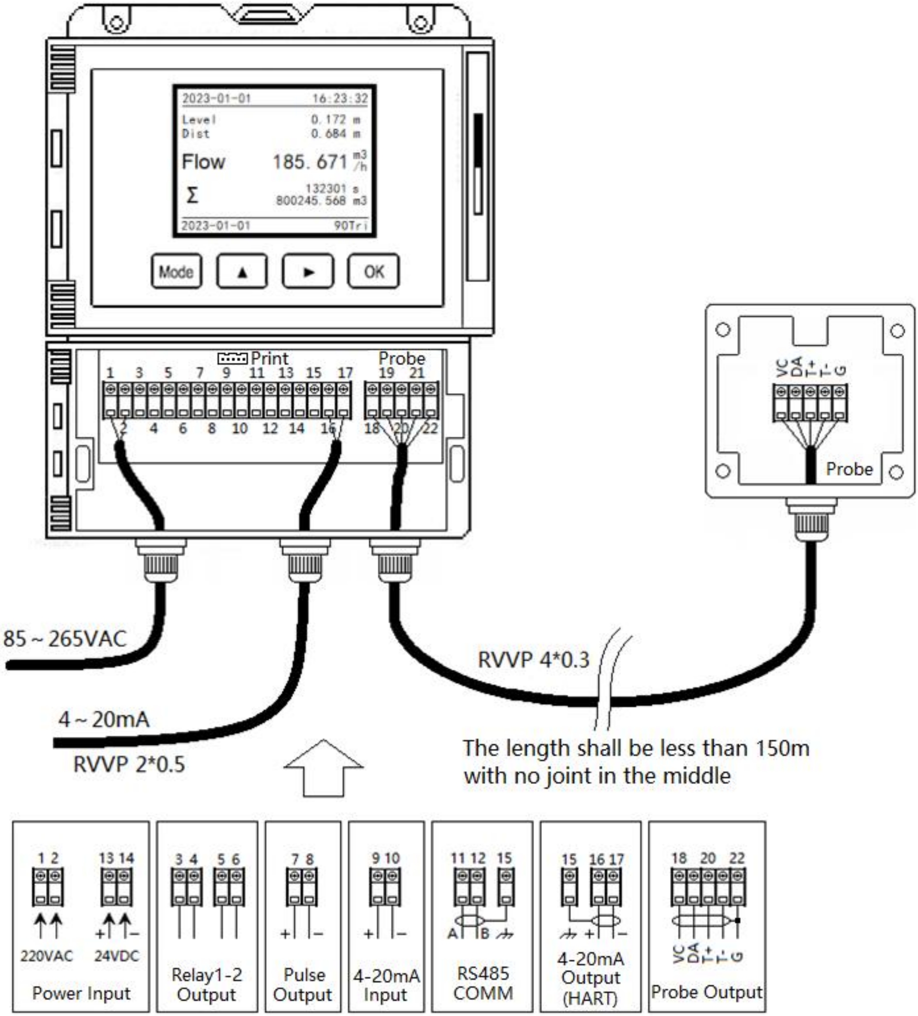
2023-01-01 16:23:32
Level 0.172 m
Dist 0.684 m
Flow 185.671 m3/h
Σ 132301 s
800245.568 m3
2023-01-01 90Tri
Mode
▲
►
OK
Print
Probe
1 3 5 7 9 11 13 15 17 19 21
2 4 6 8 10 12 14 16 18 20 22
VC DA T+ T- G
Probe
85 ~ 265VAC
4 ~ 20mA
RVVP 2*0.5
RVVP 4*0.3
The length shall be less than 150m with no joint in the middle
1 2
13 14
220VAC
24VDC
+ −
Power Input
3 4 5 6
Relay1-2 Output
7 8
+ −
Pulse Output
9 10
+ −
4-20mA Input
11 12 15
A B
RS485 COMM
15 16 17
+ −
4-20mA Output (HART)
18 20 22
VC DA T+ T- G
Probe Output

Notice:

- The probe cable is not allowed to have joints in the middle. It is forbidden to damage the shielding layer of the cable.
- HART digital interface is optional. The user can only choose HART interface or RS 485 interface. HART sampling resistance is 250Ω～500Ω.

Appendix 12: Pulse Output Wiring

Output Mode A

OC passive output needs to add the pull-up resistor R on the counter side.

- The external power supply V+ is 5V/12V/24V.
- The pull-up resistor R is 2K～10K.
- The red toggle switch on the circuit board is "OFF".

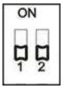

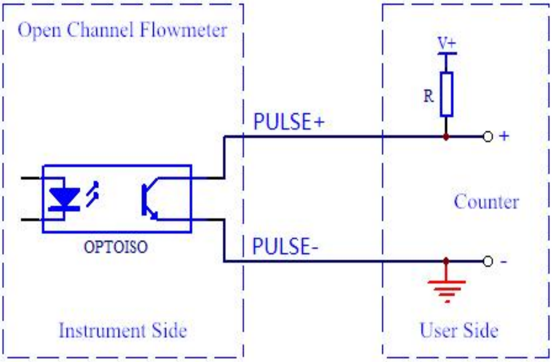
Open Channel Flowmeter
PULSE+
OPTOISO
PULSE-
Instrument Side
V+
R
+
Counter
-
User Side

Output Mode B

OC passive output needs to add the pull-down resistor R on the counter side.

- PULSE+ is connected to the external power supply V+.
- PULSE- outputs the pulse signal.
- The red toggle switch on the circuit board is "OFF".

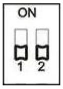

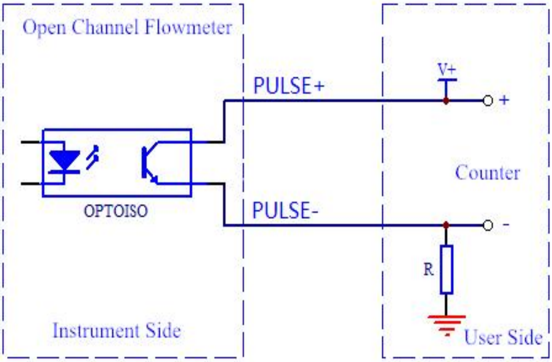
Open Channel Flowmeter
PULSE+
OPTOISO
PULSE-
Instrument Side
V+
+
Counter
-
R
User Side

Output Mode C

Active output in level mode can directly drive the load R.

- The internal V+ is DC24V.
- The red toggle switch on the circuit board is "ON".

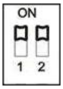

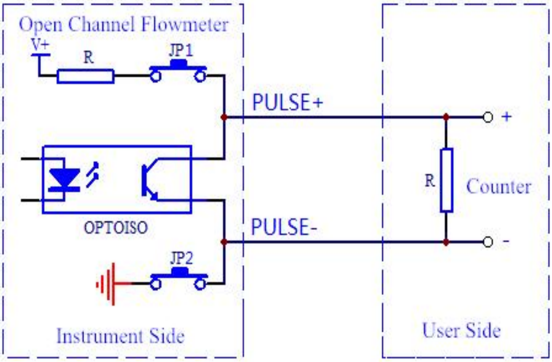
Open Channel Flowmeter
V+
R
JP1
PULSE+
OPTOISO
PULSE-
JP2
Instrument Side
+
R
Counter
-
User Side

Packing List

No.	Equipment or Accessory Name	Unit	Quantity	Remark
1	Open Channel Flowmeter	Set	1	
2	Plastic Nut (Default)	Piece	1	
3	Installation Guide Manual	Piece	1	
4	Product Qualification Certificate	Piece	1	

Attentions

- During operation and transportation, please do not violently shake or hit the equipment.
- During instrument transportation and storage, the environmental temperature shall not be less than -40 ℃ or more than +70℃, the relative humidity shall not be more than 85%, and there is no corrosive gas or strong electromagnetic field around it; the original packaging box shall be used during transportation.

Copyright

The company reserves all patents around the world. Without the prior written approval by the company, any part of the instrument, including source code, shall not be duplicated, transmitted, transcribed or translated into any language or computer language in any form or by electronic, electromagnetic, optical, manual or other methods.

Without the prior written approval by the company, the manual shall not be duplicated, photocopied, reprinted, translated or transmitted to any electronic or machine-readable medium, in whole or in part.

The name and logo displayed on the product are the registered trademark or brand of the company. All other trademarks, commodity names or company names referenced herein are used for identification purposes, and are the property of their respective owners.

Return Receipt of Warranty Card

User Name			
Address			
Contact Person		**Telephone**	
Product Model		**Product No.**	
Ex-factory Date		**Installation Manager**	

……………………………………………………………………………………

Warranty Card Description

Product Model		**Product No.**	
Ex-factory Date		**Installation Manager**	

Warranty Policy:

- Warranty Period: The product warranty period of the company is 24 months from the ex-factory date. The company may provide the paid service of extending the warranty period.

The following circumstances are not within the free warranty scope:

- The product or its parts have exceeded the free warranty period.
- The hardware failure is generated because the operating environment doesn’t meet the use requirements of the product.
- The fault is generated because the user cannot carry out the operation according to the use methods and attentions described in the operation manual.
- The fault is caused by force majeure events, such as thunder & lightning, flood, fire, and other natural factors. The failure or damage is caused by unauthorized disassembly for repair, unauthorized modification, or abuse.

Restriction Description:

- The interpretation right of the warranty card shall be owned by the company. The company has the right to modify the content of the card, without prior notice.